Information Engineering & Technology
Electronics, Communications, & Networks
Systems & Control Course Evaluation
Project

Systems and Control Project

Directions:

- This project requires, understanding the concept, hand analysis for the requirements, MATLAB coding and hardware implementation.
- Hard Copy of the project report including codes, figures, comments, etc. should be printed out and handed to your evaluating TA on the day of the evaluation
- Project must be in groups of **3- 4 students**, not more.

GOOD NEWS: cross-labs is allowed ☺

- This project is of **20% of the total score** of the Systems & control course.
- The deadline of the project will be on the day of the evaluation.
- Evaluation dates for the project on **9/12, 10/12, and 11/12** Please note; all group members MUST be available for the evaluation together.

Objective:

Watch this link so that you can see the final result of the project

https://srituhobby.com/what-is-a-pid-controller-and-how-does-it-work-with-an-arduino/

The objective of this project is as follows:

- A practical application on the Systems and Control course.
- Analyzing some given Processes.
- Designing the PID controller to get a specific response.
- Tuning the PID controller using different rules.
- Designing Lead-Lag Compensator to get a specific response.
- Tuning the Lead-lag compensator.
- Improving either the transient or the steady state responses or both for any system.

Procedure:

- Analyzing the system response for a given plant with unity feed-back path for both transient and steady state responses.
- Designing an analog circuit that represents a PID controller with the flexibility of changing its parameters.
- Analyzing the system after inserting the controller in the feed forward path for both transient and steady state response (using MATLAB and Simulink)
- Deducing the improvements made by the controller.
- Designing an analog circuit that represents a Lead-Lag compensator with the flexibility of changing its parameters.
- Analyzing the system after inserting this new controller in the feed forward path for both transient and steady state response (using MATLAB and Simulink)
- Deducing the improvements made by the controller.
- Building the Hardware setup.

Steps:

For the unity feedback block diagram shown:

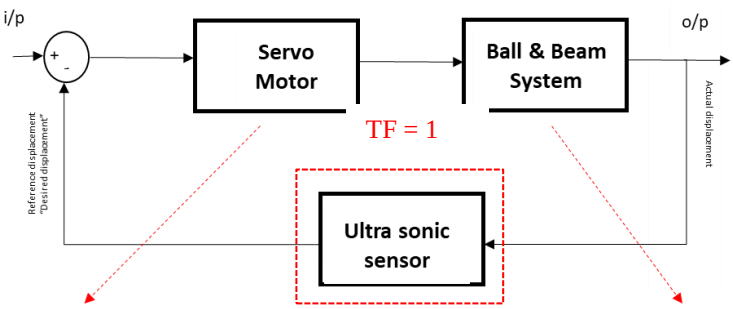

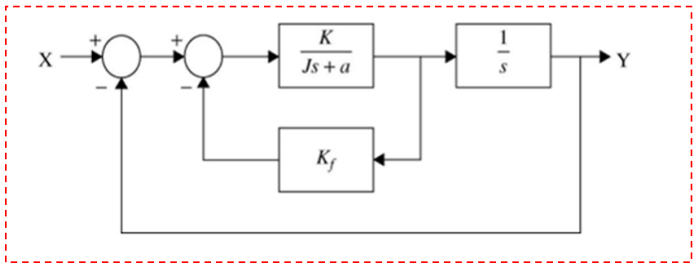

Block diagram of Servo Motor

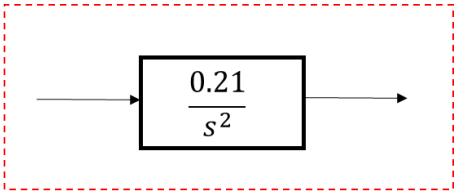

Transfer function of Ball & Beam System

The above **unity negative feedback system** has the 4th order feed-forward transfer function G(s) shown below:

$$G(s) = \frac{\omega_n^2}{s^2 + 2\zeta\omega_n s + \omega_n^2} \cdot \frac{0.21}{s^2}$$

Where ω_n is the least right most 2 digits in any student ID in the group such that $\omega_n > 20$, and $\zeta = 0.5$.

You are required to do the following:

- Derive the closed loop transfer function with the values of components given above.
- Use MATLAB to design the parameters of that PID controller to get a maximum overshoot ≤ **20%**, settling time (5% error rule) ≤ **2.5 secs**, a steady state error of approximately **1%**.

Now, it is required to design a controller $G_c(s)$ to improve the system response as shown:

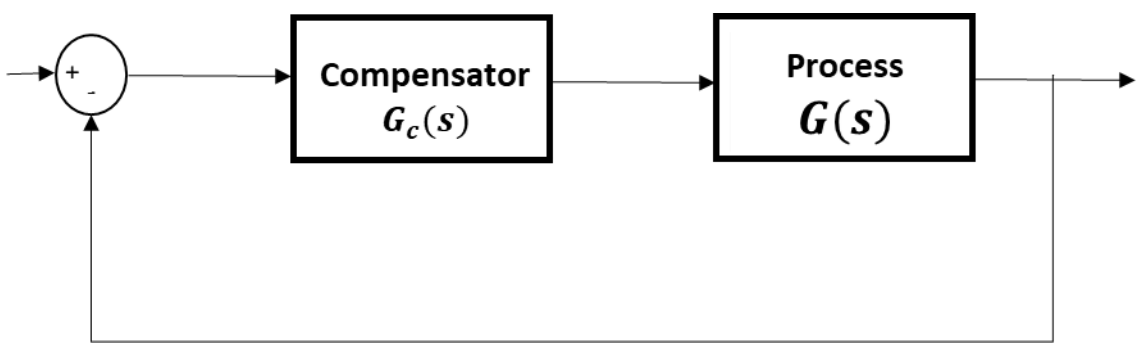

1. Design the PID controller with the flexibility to use only P, PI, PD, or PID block.
2. Derive the system closed loop transfer function after inserting the controller.
3. Analyze the complete system using MATLAB, and Simulink.
4. Design the Lead- Lag Compensator with the flexibility to use only Lead, Lag or both Lead-Lag construction.
5. Derive the system closed loop transfer function after inserting this new compensator.
6. Analyze the complete system using MATLAB, and Simulink.